HCF4017B

DECADE COUNTER WITH 10 DECODED OUTPUTS

- MEDIUM SPEED OPERATION :
  10 MHz (Typ.) at V_{DD} = 10V
- FULLY STATIC OPERATION
- STANDARDIZED SYMMETRICAL OUTPUT CHARACTERISTICS
- QUIESCENT CURRENT SPECIFIED UP TO 20V
- 5V, 10V AND 15V PARAMETRIC RATINGS
- INPUT LEAKAGE CURRENT
  I_I = 100nA (MAX) AT V_{DD} = 18V T_A = 25°C
- 100% TESTED FOR QUIESCENT CURRENT
- MEETS ALL REQUIREMENTS OF JEDEC JESD13B " STANDARD SPECIFICATIONS FOR DESCRIPTION OF B SERIES CMOS DEVICES"

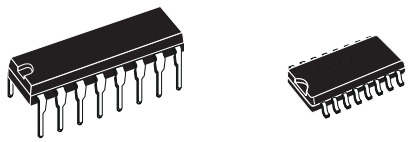

DIP SOP

ORDER CODES

PACKAGE	TUBE	T & R
DIP	HCF4017BEY	
SOP	HCF4017BM1	HCF4017M013TR

DESCRIPTION

The HCF4017B is a monolithic integrated circuit fabricated in Metal Oxide Semiconductor technology available in DIP and SOP packages.

The HCF4017B is 5-stage Johnson counter having 10 decoded outputs. Inputs include a CLOCK, a RESET, and a CLOCK INHIBIT signal. Schmitt trigger action in the clock input circuit provides pulse shaping that allows unlimited clock input pulse rise and fall times. This counter is advanced one count at the positive clock signal transition if the CLOCK INHIBIT signal is low. Counter advanced via the clock line is inhibited when the CLOCK INHIBIT signal is high. A high RESET signal clears the counter to its zero count. Use of the Johnson decade-counter configuration permits high speed operation, 2-input decimal decode gating and spike-free decoded outputs. Anti-lock gating is provided, thus assuring proper counting sequence. The decoded outputs are normally low and go high only at their respective decoded time slot. Each decoded output remains high for one full clock cycle. A CARRY - OUT signal completes one cycle every 10 clock input cycles and is used to ripple-clock the succeeding device in a multi-device counting chain.

PIN CONNECTION

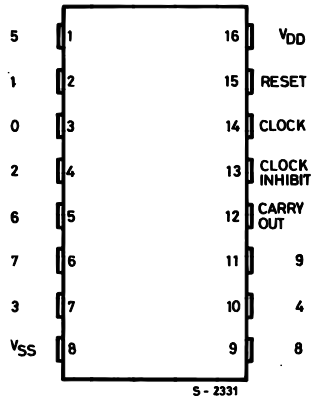

INPUT EQUIVALENT CIRCUIT

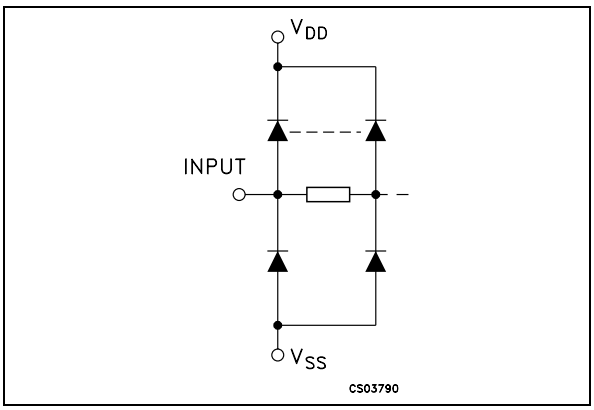

PIN DESCRIPTION

PIN No	SYMBOL	NAME AND FUNCTION
3, 2, 4, 7, 10, 1, 5, 6, 9, 11	0 to 9	Decoded Decimal Output
14	CLOCK	Clock Input
13	CLOCK INHIBIT	Clock Inhibit Input
15	RESET	Reset Input
12	CARRY OUT	Carry Output
8	V_{SS}	Negative Supply Voltage
16	V_{DD}	Positive Supply Voltage

FUNCTIONAL DIAGRAM

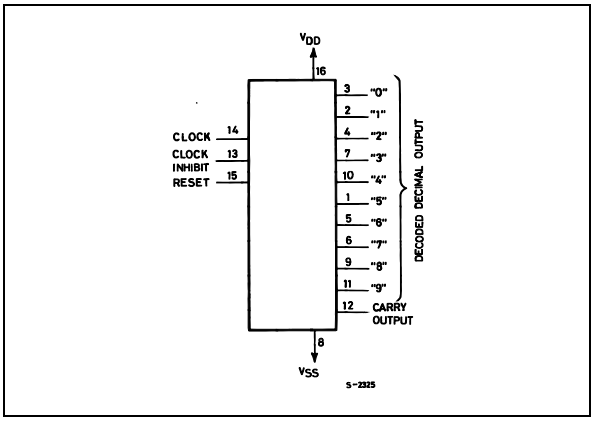

TRUTH TABLE

CLOCK	CLOCK INHIBIT	RESET	DECODED OUTPUT
X	X	H	Q_0
L	X	L	Q_n
X	H	L	Q_n
↑	L	L	Q_{n+1}
↓	L	L	Q_n
H	↑	L	Q_n
H	↓	L	Q_{n+1}

X : Don't Care

Qn : No Change

LOGIC DIAGRAM

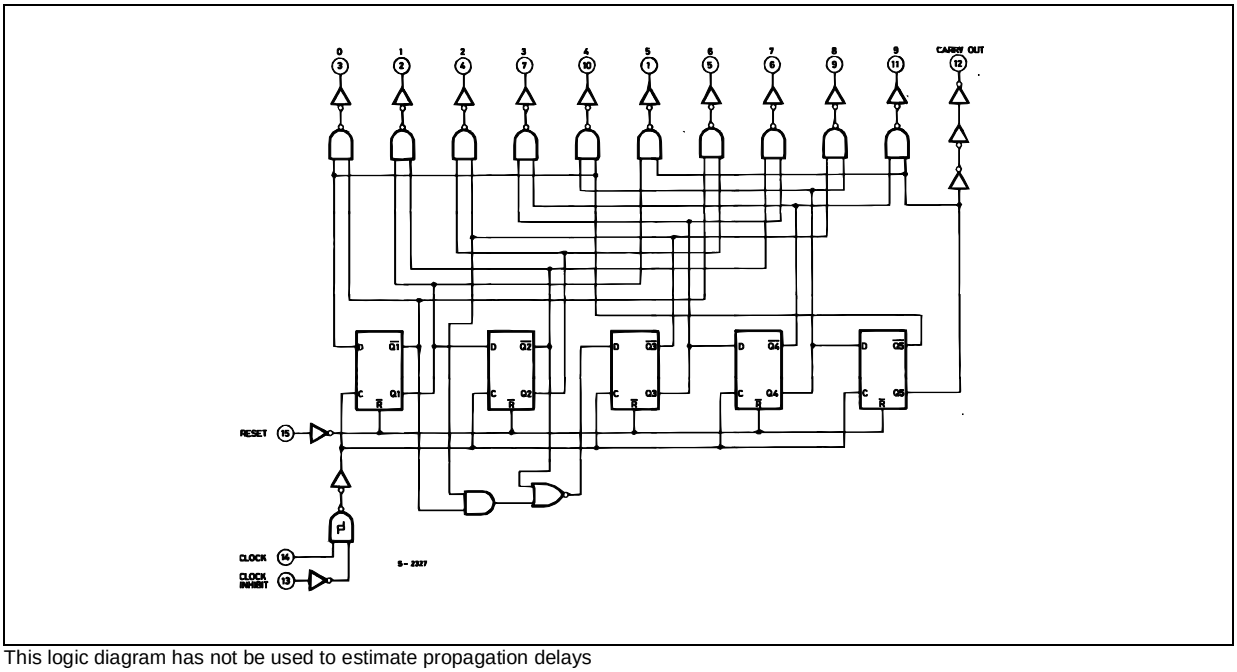

This logic diagram has not be used to estimate propagation delays

TIMING CHART

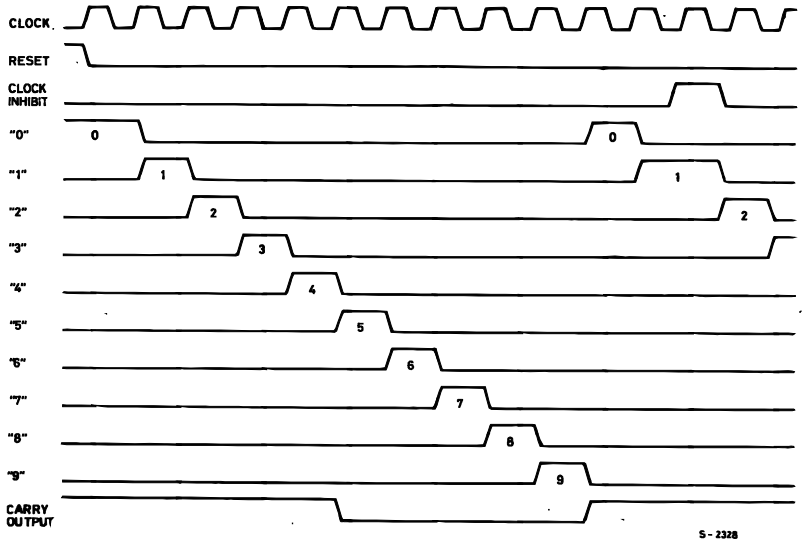

ABSOLUTE MAXIMUM RATINGS

Symbol	Parameter	Value	Unit
V_{DD}	Supply Voltage	-0.5 to +22	V
V_I	DC Input Voltage	-0.5 to V_{DD} + 0.5	V
I_I	DC Input Current	± 10	mA
P_D	Power Dissipation per Package	200	mW
	Power Dissipation per Output Transistor	100	mW
T_{op}	Operating Temperature	-55 to +125	°C
T_{stg}	Storage Temperature	-65 to +150	°C

Absolute Maximum Ratings are those values beyond which damage to the device may occur. Functional operation under these conditions is not implied.
All voltage values are referred to V_{SS} pin voltage.

RECOMMENDED OPERATING CONDITIONS

Symbol	Parameter	Value	Unit
V_{DD}	Supply Voltage	3 to 20	V
V_I	Input Voltage	0 to V_{DD}	V
T_{op}	Operating Temperature	-55 to 125	°C

DC SPECIFICATIONS

Symbol	Parameter	Test Condition				Value							Unit
		V_I (V)	V_O (V)	$\|I_O\|$ (μA)	V_{DD} (V)	T_A = 25°C			-40 to 85°C		-55 to 125°C		
						Min.	Typ.	Max.	Min.	Max.	Min.	Max.	
I_L	Quiescent Current	0/5			5		0.04	5		150		150	μA
		0/10			10		0.04	10		300		300	
		0/15			15		0.04	20		600		600	
		0/20			20		0.08	100		3000		3000	
V_{OH}	High Level Output Voltage	0/5		<1	5	4.95			4.95		4.95		V
		0/10		<1	10	9.95			9.95		9.95		
		0/15		<1	15	14.95			14.95		14.95		
V_{OL}	Low Level Output Voltage	5/0		<1	5		0.05			0.05		0.05	V
		10/0		<1	10		0.05			0.05		0.05	
		15/0		<1	15		0.05			0.05		0.05	
V_{IH}	High Level Input Voltage		0.5/4.5	<1	5	3.5			3.5		3.5		V
			1/9	<1	10	7			7		7		
			1.5/13.5	<1	15	11			11		11		
V_{IL}	Low Level Input Voltage		4.5/0.5	<1	5			1.5		1.5		1.5	V
			9/1	<1	10			3		3		3	
			13.5/1.5	<1	15			4		4		4	
I_{OH}	Output Drive Current	0/5	2.5	<1	5	-1.36	-3.2		-1.1		-1.1		mA
		0/5	4.6	<1	5	-0.44	-1		-0.36		-0.36		
		0/10	9.5	<1	10	-1.1	-2.6		-0.9		-0.9		
		0/15	13.5	<1	15	-3.0	-6.8		-2.4		-2.4		
I_{OL}	Output Sink Current	0/5	0.4	<1	5	0.44	1		0.36		0.36		mA
		0/10	0.5	<1	10	1.1	2.6		0.9		0.9		
		0/15	1.5	<1	15	3.0	6.8		2.4		2.4		
I_I	Input Leakage Current	0/18	Any Input		18		$\pm 10^{-5}$	±0.1		±1		±1	μA
C_I	Input Capacitance		Any Input				5	7.5					pF

The Noise Margin for both "1" and "0" level is: 1V min. with V_{DD}=5V, 2V min. with V_{DD}=10V, 2.5V min. with V_{DD}=15V

DYNAMIC ELECTRICAL CHARACTERISTICS (T_{amb} = 25°C, C_L = 50pF, R_L = 200KΩ, $t_r = t_f$ = 20 ns)

Symbol	Parameter	Test Condition		Value (*)			Unit
		V_{DD} (V)		Min.	Typ.	Max.	
CLOCKED OPERATION							
t_{PLH} t_{PHL}	Propagation Delay Time (decode out)	5			325	650	ns
		10			135	270	
		15			85	170	
	Propagation Delay Time (carry out)	5			300	600	ns
		10			125	250	
		15			80	160	
t_{THL} t_{TLH}	Transition Time (carry out or decoded out lines)	5			100	200	ns
		10			50	100	
		15			40	80	
f_{CL} (1)	Maximum Clock Input Frequency	5		2.5	5	5	MHz
		10		5	10		
		15		5.5	11		
t_W	Minimum Clock Pulse Width	5			100	200	ns
		10			45	90	
		15			30	60	
t_r , t_f	Clock Input Rise or Fall Time	5		unlimited			µs
		10					
		15					
t_{setup}	Data Setup Time Minimum Clock Inhibit	5			115	230	ns
		10			50	100	
		15			35	75	
RESET OPERATION							
t_{PLH}, t_{PHL}	Propagation Delay Time (carry out or decoded out lines)	5			265	530	ns
		10			115	230	
		15			85	170	
t_W	Minimum Reset Pulse Width	5			130	260	ns
		10			55	110	
		15			30	60	
t_{REM}	Minimum Reset Removal Time	5			200	400	ns
		10			140	280	
		15			75	150	

(*) Typical temperature coefficient for all V_{DD} value is 0.3 %/°C.
(1) Measured with respect to carry out line.

TYPICAL APPLICATIONS

DIVIDE BY N COUNTER(N ≤ 10) WITH DECODED OUTPUTS

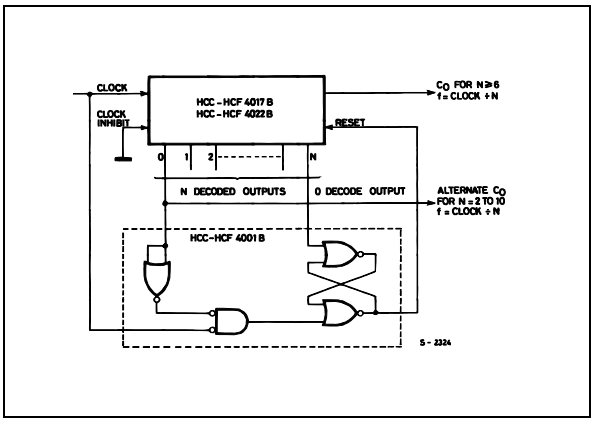

When the Nth decoded output is reached (N^{th} clock pulse) the S-R flip-flop (constructed from two NOR gates of the HCF4001B) generates a reset pulse which clears the HCF4017B to its zero count. At this time, if the Nth decoded output is greater than or equal to 6, the C_{OUT} line goes high to clock the next HCF4017B counter section. The "0" decoded output also goes high at this time. Coincidence of the clock low and decoded "0" output high resets the S-R flip-flop to enable the HCF4017B. If the Nth decoded output is less than 6, the COUT line will not go high and, therefore, cannot be used. In this case "0" decoded output may be used to perform the clocking function for the next counter.

TEST CIRCUIT

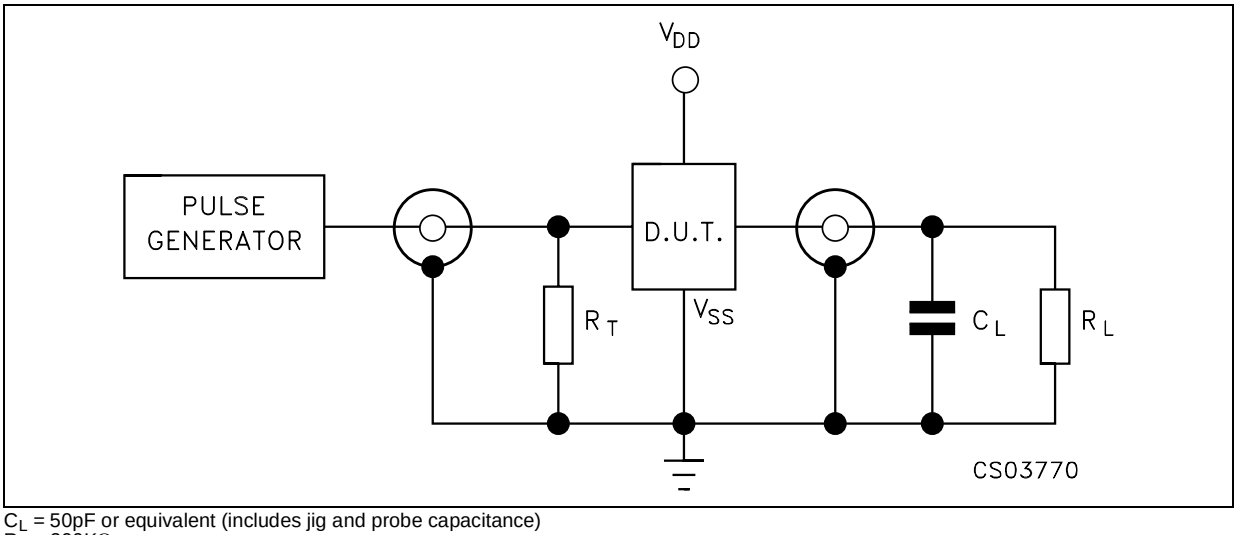

C_L = 50pF or equivalent (includes jig and probe capacitance)
R_L = 200KΩ
R_T = Z_{OUT} of pulse generator (typically 50Ω)

WAVEFORM 1 : PROPAGATION DELAY TIMES (f=1MHz; 50% duty cycle)

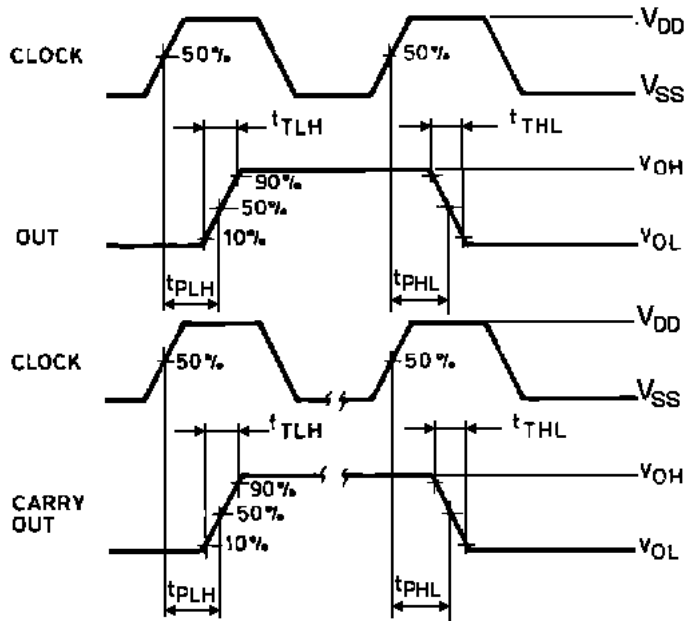

WAVEFORM 2 : MINIMUM SETUP TIME (CLOCK INHIBIT TO CLOCK) (f=1MHz; 50% duty cycle)

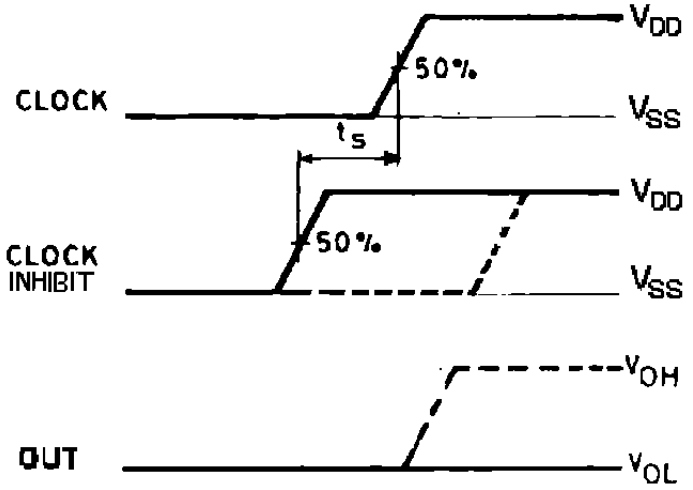

WAVEFORM 3 : PROPAGATION DELAY TIMES, MINIMUM RESET PULSE WIDTH (f=1MHz; 50% duty cycle)

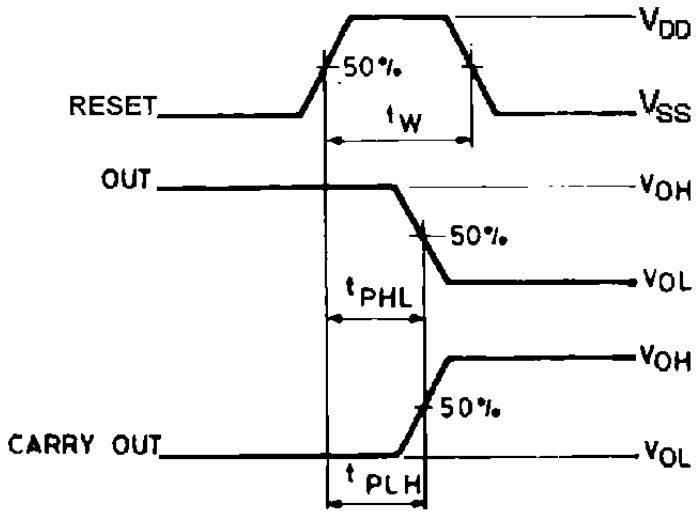

WAVEFORM 4 : MINIMUM SETUP TIME (CLOCK TO CLOCK INHIBIT) (f=1MHz; 50% duty cycle)

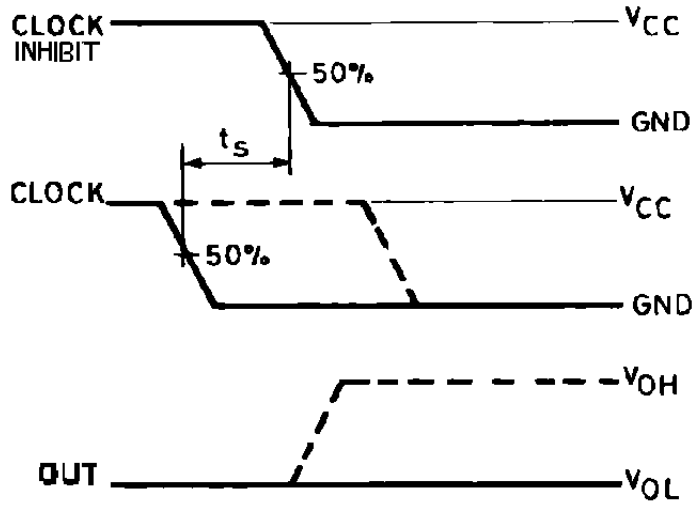

Plastic DIP-16 (0.25) MECHANICAL DATA

DIM.	mm.			inch		
	MIN.	TYP	MAX.	MIN.	TYP.	MAX.
a1	0.51			0.020		
B	0.77		1.65	0.030		0.065
b		0.5			0.020	
b1		0.25			0.010	
D			20			0.787
E		8.5			0.335	
e		2.54			0.100	
e3		17.78			0.700	
F			7.1			0.280
I			5.1			0.201
L		3.3			0.130	
Z			1.27			0.050

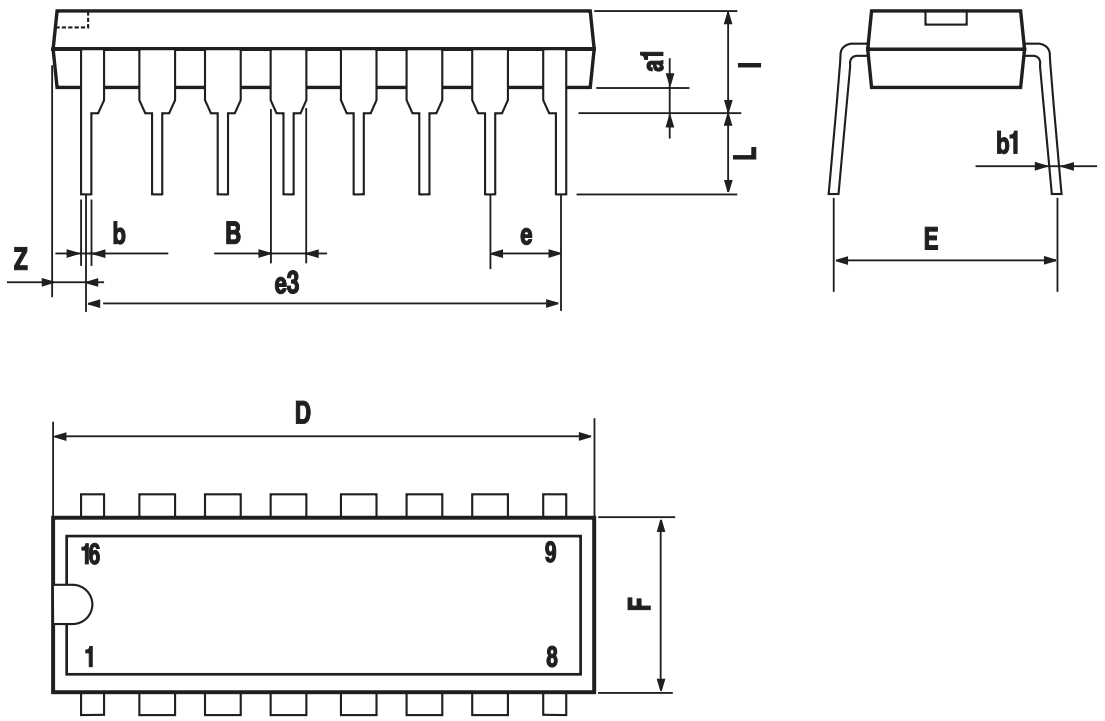

P001C

SO-16 MECHANICAL DATA

DIM.	mm.			inch		
	MIN.	TYP	MAX.	MIN.	TYP.	MAX.
A			1.75			0.068
a1	0.1		0.2	0.003		0.007
a2			1.65			0.064
b	0.35		0.46	0.013		0.018
b1	0.19		0.25	0.007		0.010
C		0.5			0.019	
c1	45° (typ.)					
D	9.8		10	0.385		0.393
E	5.8		6.2	0.228		0.244
e		1.27			0.050	
e3		8.89			0.350	
F	3.8		4.0	0.149		0.157
G	4.6		5.3	0.181		0.208
L	0.5		1.27	0.019		0.050
M			0.62			0.024
S	8° (max.)					

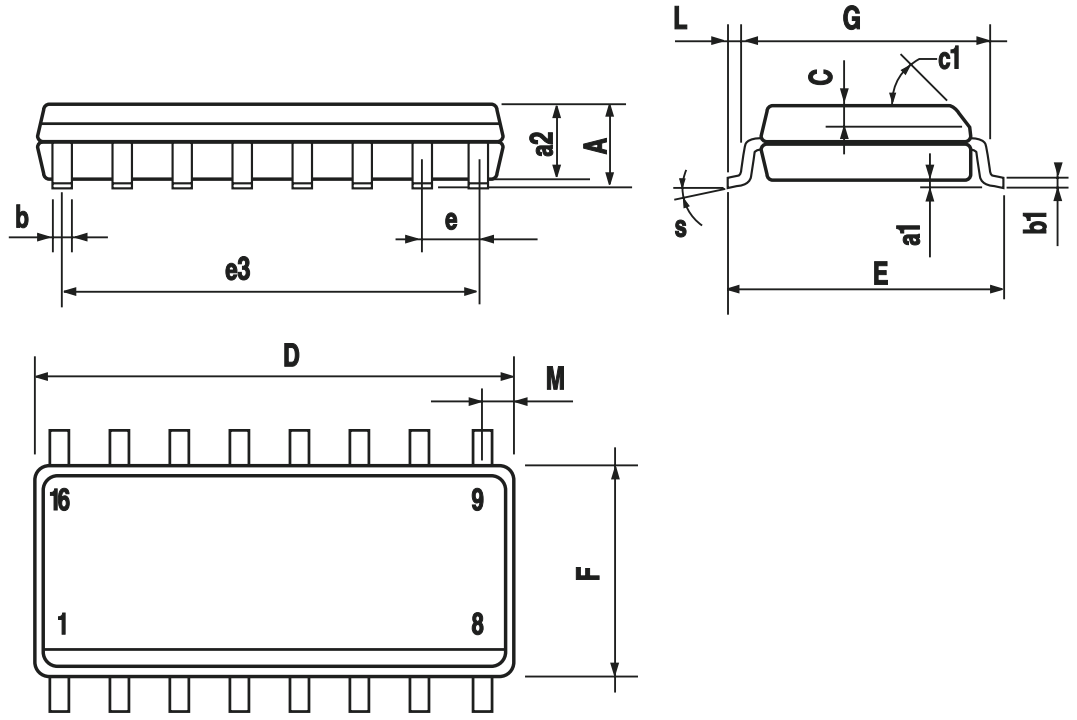

PO13H

Information furnished is believed to be accurate and reliable. However, STMicroelectronics assumes no responsibility for the consequences of use of such information nor for any infringement of patents or other rights of third parties which may result from its use. No license is granted by implication or otherwise under any patent or patent rights of STMicroelectronics. Specifications mentioned in this publication are subject to change without notice. This publication supersedes and replaces all information previously supplied. STMicroelectronics products are not authorized for use as critical components in life support devices or systems without express written approval of STMicroelectronics.

© The ST logo is a registered trademark of STMicroelectronics

© 2001 STMicroelectronics - Printed in Italy - All Rights Reserved
STMicroelectronics GROUP OF COMPANIES
Australia - Brazil - China - Finland - France - Germany - Hong Kong - India - Italy - Japan - Malaysia - Malta - Morocco
Singapore - Spain - Sweden - Switzerland - United Kingdom
© http://www.st.com